TECHNICAL SERVICE BULLETIN **No.005/2001**
Car and Light/Medium Commercial 17.05.2001

Section: 303-03 (24)
Model: Focus with 1.4L/1.6L Zetec-SE engine
Markets: All
Subject: Temperature gauge reads high, in or close to red zone.

Summary
Should a customer express concern over high readings of the temperature gauge under relatively low ambient driving conditions, the probable cause could be any one of several factors. This bulletin contains a diagnostic procedure which should be followed, in the sequence shown, in order to rectify the concern.

This bulletin supersedes TSB 005/2001 dated 11.01.2001. Please destroy the previous edition of this bulletin.

Parts Required

Description	Finis Code
Expansion tank cap	7 370 374
Expansion tank	1 091 364
74° Thermostat	1 138 077
Coolant hose kit	1 139 359
Hose clamp 25 x 40 (two off)	1 032 773
Hose clamp 20 x 32 (two off)	1 032 772

Labour Time

FDS2000/WDS - Preliminary Check	29 100 0
FDS2000/WDS - Main Check	29 101 1
Thermostat - Remove and Install (including revised degas procedure)	1.0 hour

Repair Code

Causal Part:	33 304
Defect Code:	41
ACES Condition Code:	41

Production Action
A recalibration of the PCM has been carried out in production from 09.2000 (build code YL)

Service Instructions
See Summary

1. Carry out FDS2000/WDS Preliminary and Main Check procedures.
- Check that the fan is functioning correctly.
- Check that the temperature gauge is reading accurately.
- Check the operation of the Heated Oxygen Sensor (HO2S) and Mass Air Flow (MAF) sensor.
- Clear any codes found and replace components as necessary.

2. Using FDS2000/WDS, record the vehicle Lamda reading.

3. Visually inspect the aspirator hose to make sure that it is correclty routed.
- Check the water outlet connector to make sure that the top hose or heater supply hose are not blocked.

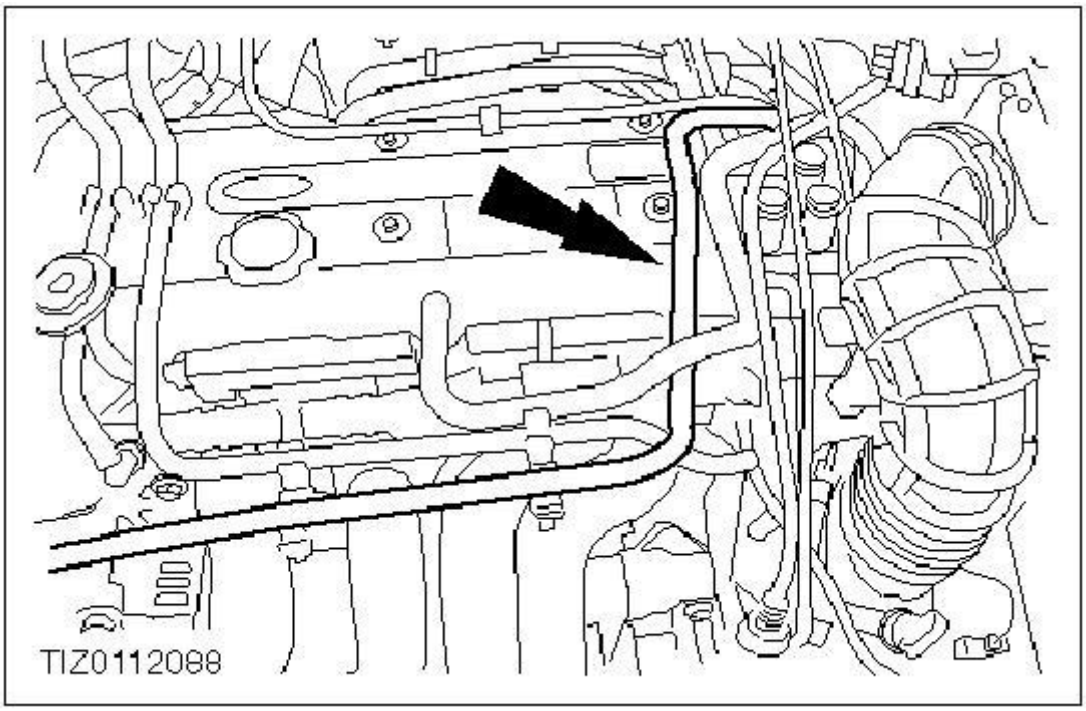

Note:
If any damage to the expansion tank or cap has been sustained, in particular damage to the rim of the expansion bottle neck, a new expansion tank or cap (see Parts Required) should be installed.

4. Visually inspect the expansion tank and cap for damage.

5. Visually inspect the expansion tank for fluid discoloration and debris.

Note:
When recalibrating the module, use disc B12 onwards for manual trnasmissions and B13 for automatic transmissions.

6. Recalibrate the module.
- If the recalibration cures the concern, no further action is required.
- If the concern is still apparent, go to next step.

Rework the coolant hoses

7. Drain the coolant (refer to the Drain procedure detailed below).

8. Remove the thermostat from the vehicle. For further information, refer to Section 303-03 (TIS-CD).

Note:
Make sure that the revised thermostat has the number 74 stamped on its base and is operating correctly according to Diagnostic and Testing procedure in Section 303-03 (TIS-CD).

9. Install a revised thermostat (see parts required). For further information, refer to Section 303-03 (TIS-CD).

Note:
The distance between the two points should be approx. 150 mm.

10. Using the hose bypass kit (see part required), determine and mark the locations on the radiator top hose and heater return hose.

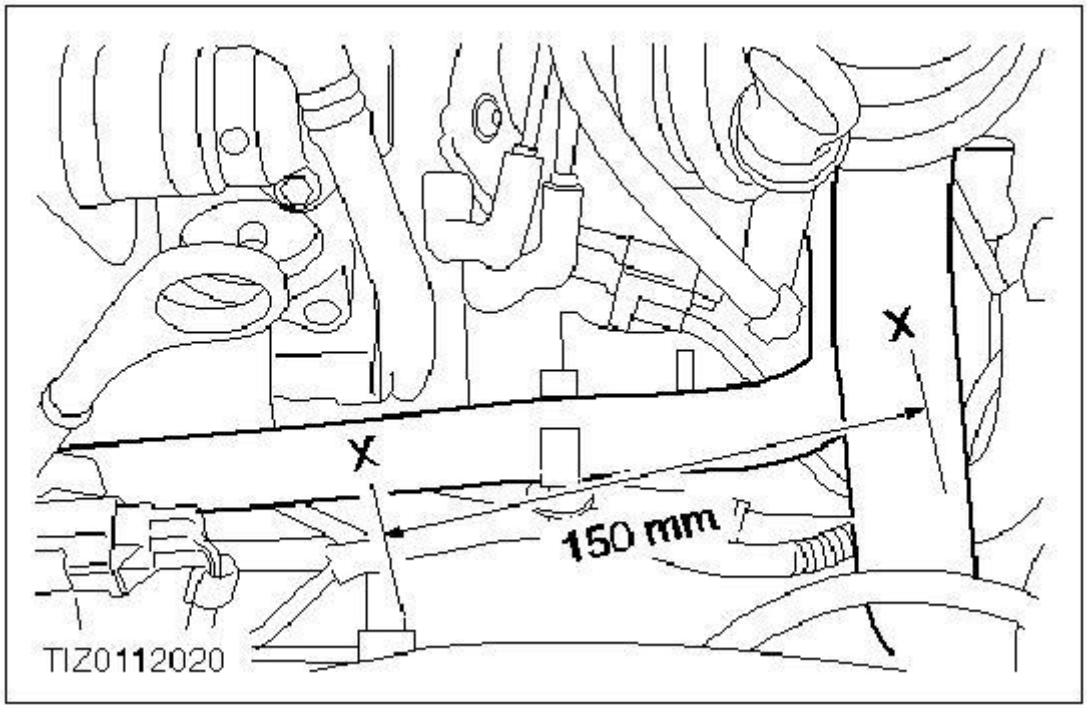

CAUTION:
Care must be taken to make the cuts in the hoses as square as possible.

11. Cut the heater return hose and top hose at the marked locations where the connectors will be installed.

Note:
Make sure the hose clamps are put over the existing hoses before the bypass kit is introduced.

12. Install the bypass kit (see parts required).

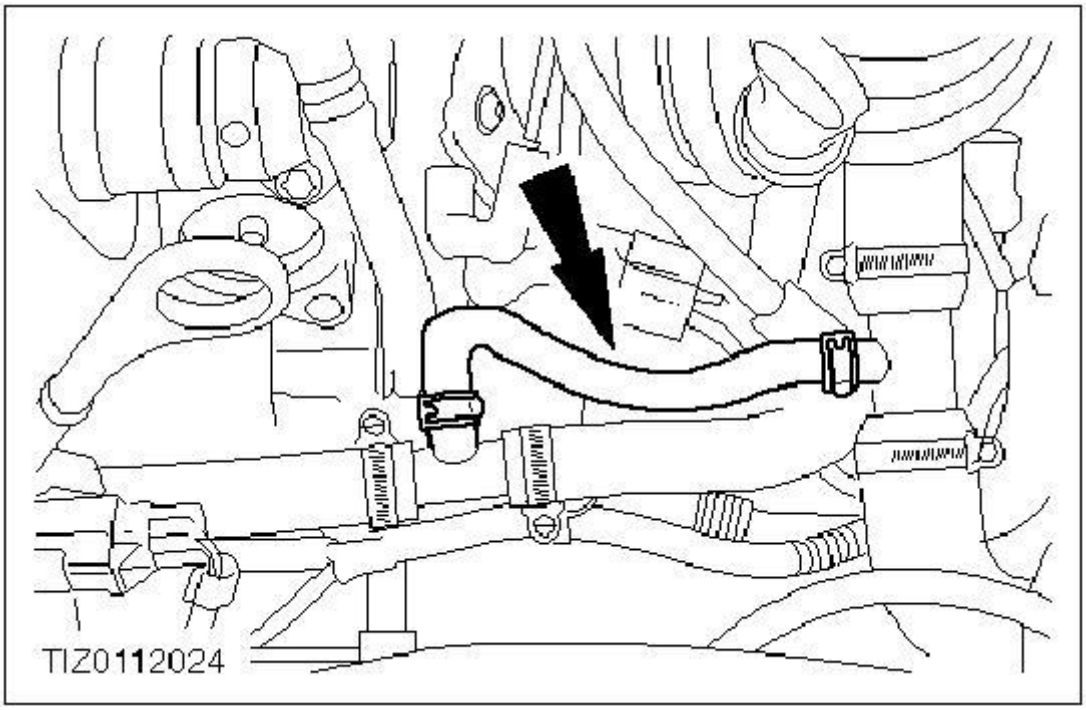

13. Securely tighten the hose clamps in position.

Degas and Fill Procedure for Service fill of Zetec-SE Powertrain Installation in Focus

Drain

WARNING:
When releasing the system pressure, cover the expansion tank cap with a thick cloth to prevent the possibility of coolant scalding. Failure to follow this instruction may result in personal injury.

CAUTION:
When draining the engine coolant or changing any cooling system components, it is imperative that no coolant comes into contact with the timing or accessory drive belt. If necessary the belt should be removed. Contamination of the belt may result in belt failure.

14. Release the cooling system pressure by slowly turning the expansion tank cap a quarter of a turn.

15. Remove the cap when all the pressure had been released.

Note:
The vehicle MUST remain level. Do NOT raise only the front or back wheels.

16. Raise and support the vehicle on a ramp.

Note:
Drain the coolant into a suitable container.

17. Open the radiator drain valve to drain the coolant.

18. Close the drain valve when all the coolant has been drained from the system.

19. Lower the vehicle.

20. Remove the aspirator line and pass air from an air line through it to remove any debris.

21. Install aspirator line.

Fill

22. Disconnect the heater supply hose from the engine.

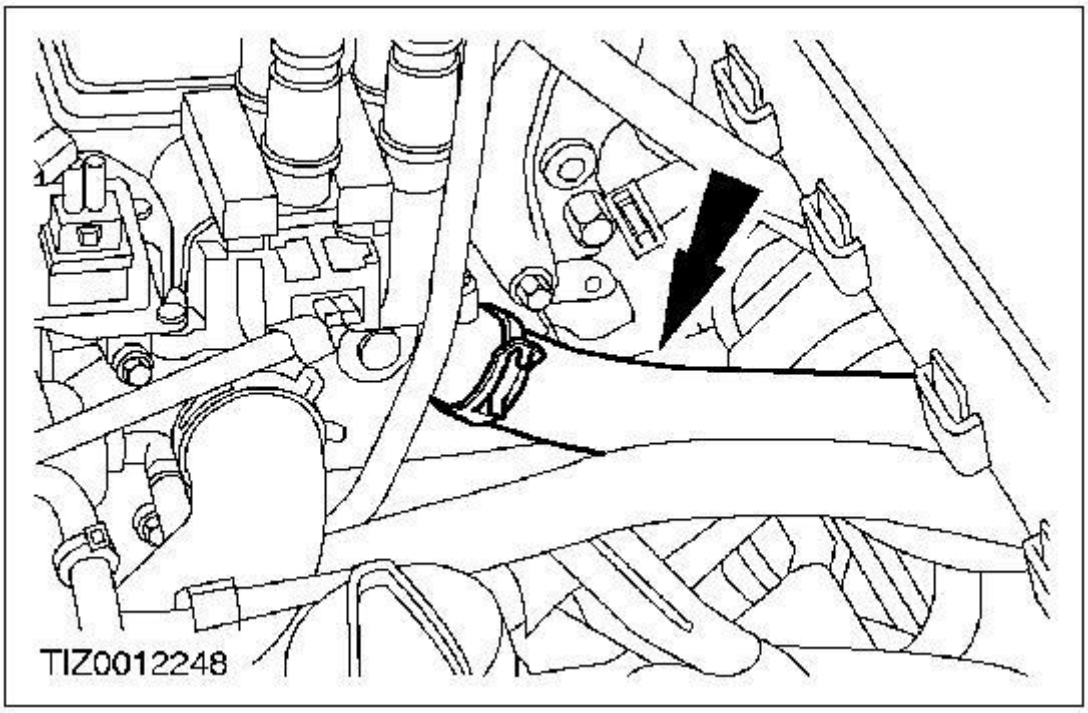

23. Using a funnel, fill the cooling system with a 50/50 coolant/water solution through the supply hose until fluid starts to come from the engine.

24. Reconnect the heater supply hose.

Note:
Make sure that the air conditioning (if equipped) is switched OFF.

25. Make sure that the heater temperature control switch is in the HOT position and the heater blower switch is in the OFF position.

26. Fill the coolant expansion tank up to the MAX mark (with the engine switched off).

27. Install the expansion tank cap.

28. Start the engine and warm the engine up at 2750 rev/min until the fan comes on.

29. Increase engine speed to 5000 rev/min and maintain for one minute.

30. Reduce engine speed to 2750 rev/min and maintain for two fan cycles or until the bottom hose feels the same temperature as the top hose, which ever occurs first.

31. Leave the engine to cool down and check the coolant level.

Note:
If the coolant level has to be topped up or additional fluid is required, the system should be filled with a pre-mixed 50/50 coolant/water solution as per Ford specifications.

32. Top up to the coolant level to MAX mark as required.

Note:
It is important to note any Lamda readings below 0.9. If the reading is consistently less than 0.9, it is likely that there is either an air leak before or at the HO2S sensor, or the HO2S sensor is malfunctioning, or the MAF sensor is not working.

33. Test drive the vehicle (100Km/h in fifth gear on a flat road from cold for 15 minutes).
- Record the temperature gauge response.
- Using FDS2000/WDS, record the vehicle Lamda reading.

Note:
If the coolant level has to be topped up or additional fluid is required, the system should be filled with a pre-mixed 50/50 coolant/water solution as per Ford specifications.

- Rectify any identified faults